Green Pin® Heavy Duty Shackle BN
Group : P-6036
Part : HDGPHM0300
WLL : 300 t

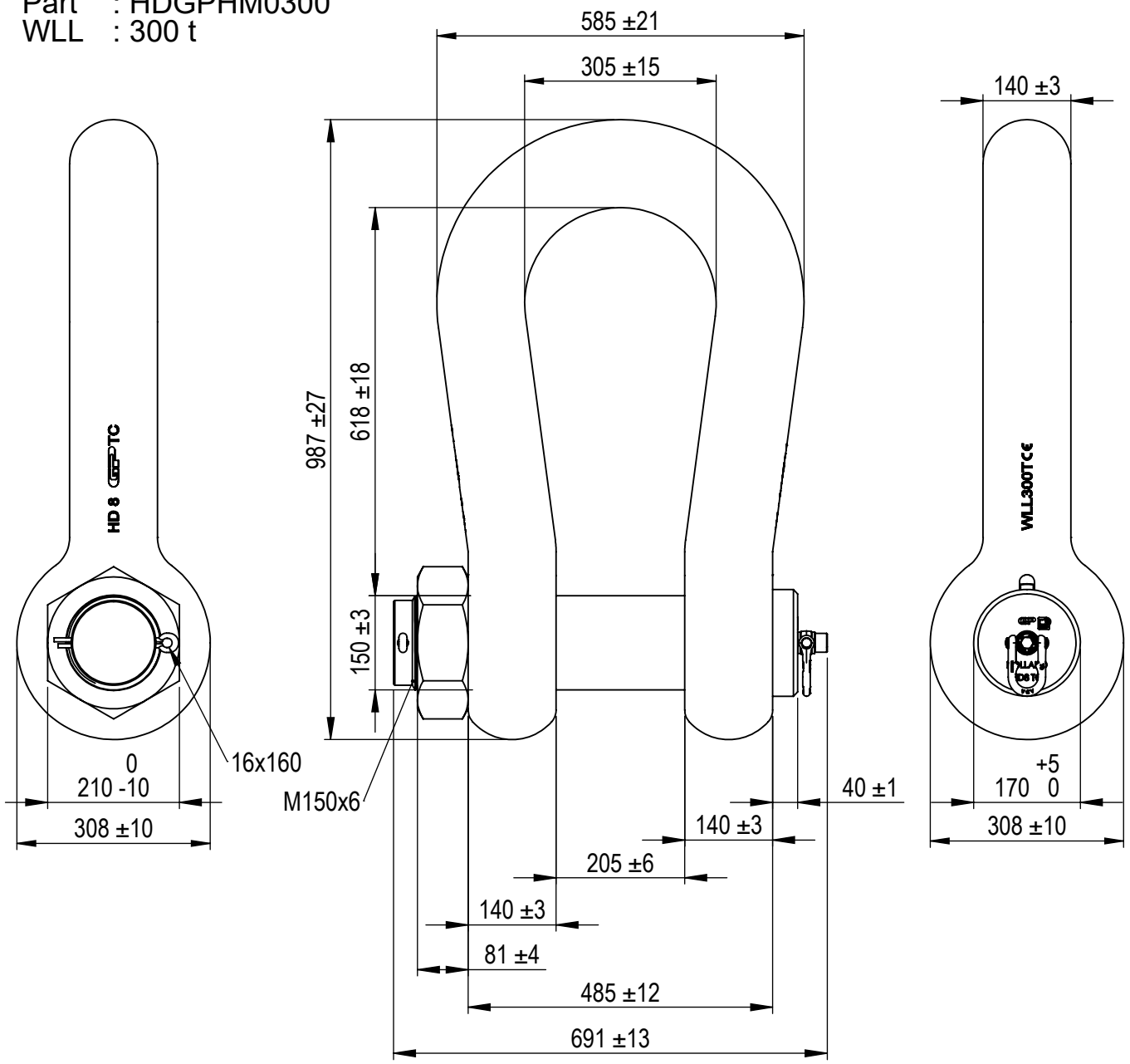

We reserve the right to make amendments on specifications in this drawing without prior notification.

Rev.	Description	Date	Drawn
A	Product Update	17-07-2020	R.B.
0	First Issue	16-11-2009	H.T.

Copyright by Van Beest B.V. moreover this document is the property of Van Beest B.V. This document or any part of it may neither be made known, copied or multiplied, nor used for any purpose other than that for which it is specifically furnished, without the prior written consent of Van Beest B.V.

Green Pin®
P.O. Box 57, 3360 AB Sliedrecht (The Netherlands)
Industrieweg 6, 3361 HJ Sliedrecht
Tel. +31(0)184-413300 www.greenpin.com

Format A4
Scale 1:10

Title Green Pin® Heavy Duty Shackle BN
High load capacity bow shackle with safety bolt

Remark
P-6036
HDGPHM0300

Drawing number 5229
Rev. A