Green Pin® Tapered Pin ROV Shackle D
Group : P-5361D
Part : POGHBB22ROVRLTD
WLL : 6.5t

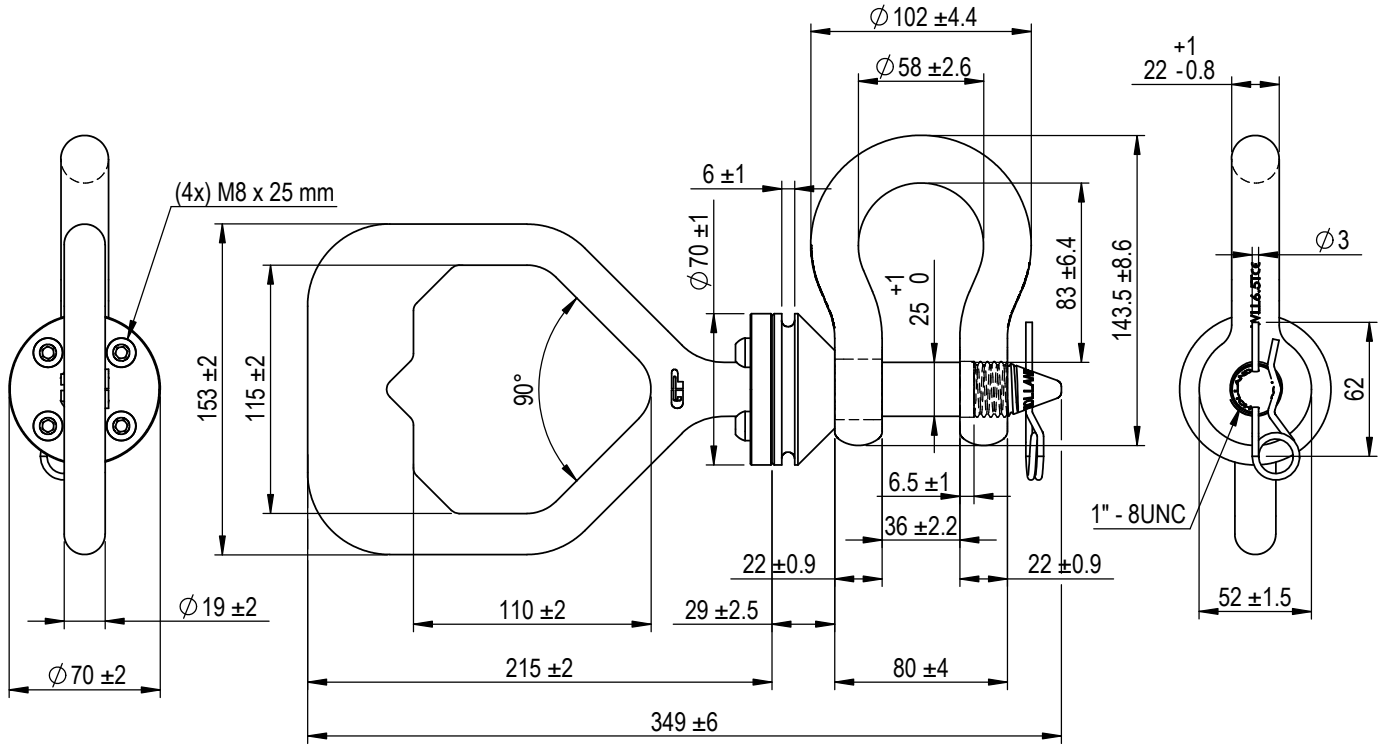

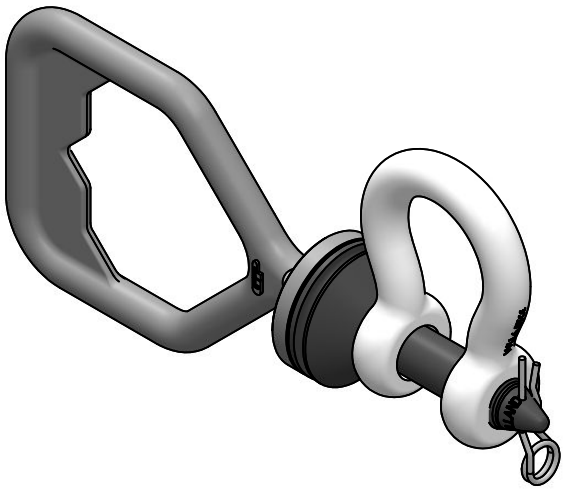

We reserve the right to make amendments on specifications in this drawing without prior notification.

Rev.	Description	Date	Drawn
0	First Issue	2021/11/1	DL

Copyright by Van Beest B.V. moreover this document is the property of Van Beest B.V. This document or any part of it may neither be made known, copied or multiplied, nor used for any purpose other than that for which it is specifically furnished, without the prior written consent of Van Beest B.V.

Green Pin®
P.O. Box 57, 3360 AB Sliedrecht (The Netherlands)
Industrieweg 6, 3361 HJ Sliedrecht
Tel. +31(0)184-413300 www.greenpin.com

Format A4
Scale 1:3.5

Title Green Pin® Tapered Pin ROV Shackle D
Release & retrieve ROV shackle (grade 8) with tapered pin and D-handle

Remark
P-5361D
POGHBB22ROVRLTD

Drawing number 6775
Rev. O