Green Pin Super® Bow Shackle BN
Group : G-5263
Part : SUGHMB32
WLL : 18t

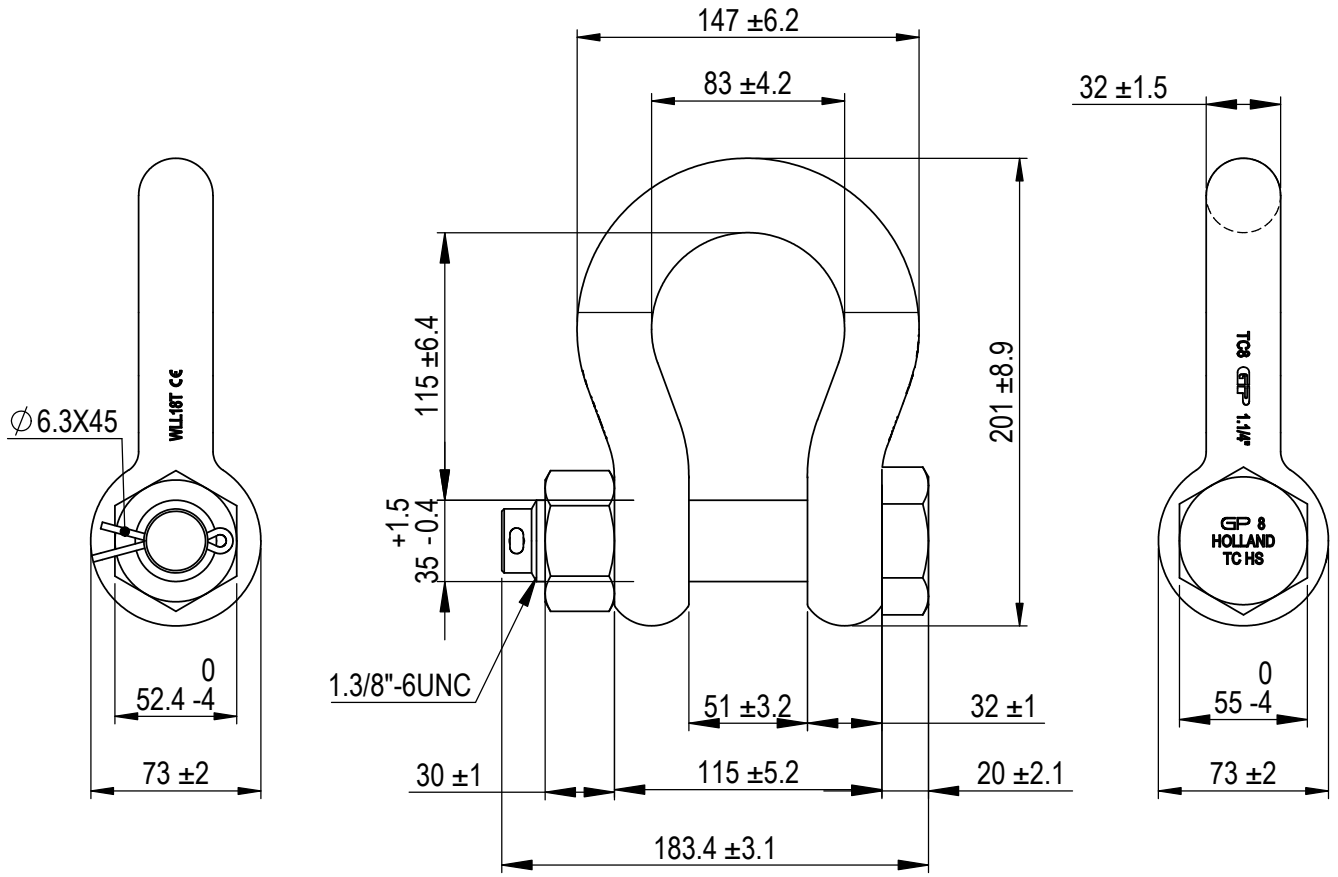

We reserve the right to make amendments on specifications in this drawing without prior notification.

Rev.	Description	Date	Drawn
A	Drawing updated	2022-1-1	DL
0	First Issue	31-07-09	H.T.

Copyright by Van Beest B.V. moreover this document is the property of Van Beest B.V. This document or any part of it may neither be made known, copied or multiplied, nor used for any purpose other than that for which it is specifically furnished, without the prior written consent of Van Beest B.V.

Green Pin®
P.O. Box 57, 3360 AB Sliedrecht (The Netherlands)
Industrieweg 6, 3361 HJ Sliedrecht
Tel. +31(0)184-413300 www.greenpin.com

Format A4
Scale 1:3.25

Title Green Pin Super® Bow Shackle BN
Grade 8 bow shackle with safety bolt

Remark
G-5263
SUGHMB32

Drawing number 5131
Rev. A