Green Pin BigMouth® Shackles
Group : G-4263
Part : ASGHMB25
WLL : 6.5 t

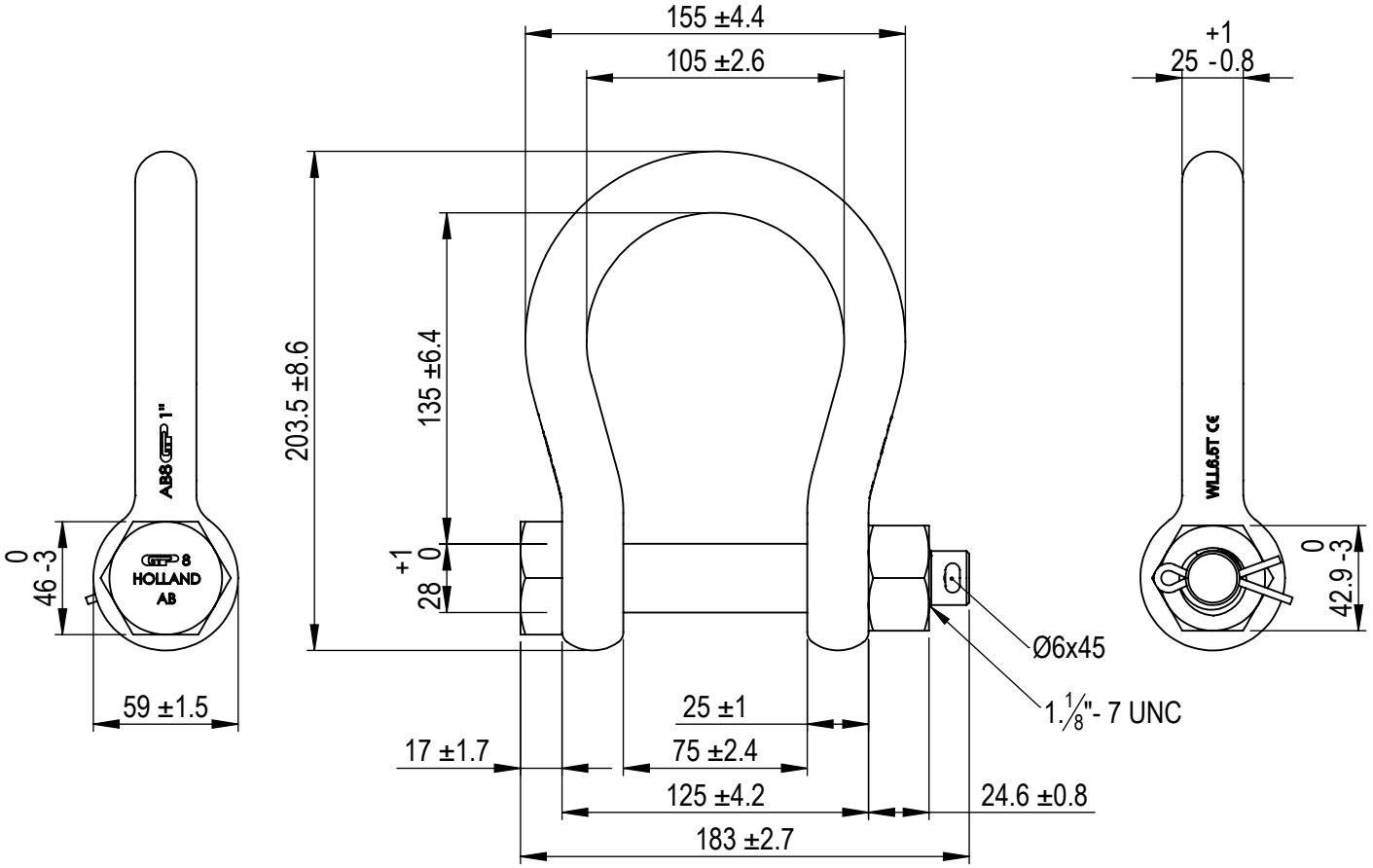

We reserve the right to make amendments on specifications in this drawing without prior notification.

Rev.	Description	Date	Drawn
0	First Issue	15-8-2018	RB

Copyright by Van Beest B.V. moreover this document is the property of Van Beest B.V. This document or any part of it may neither be made known, copied or multiplied, nor used for any purpose other than that for which it is specifically furnished, without the prior written consent of Van Beest B.V.

VAN BEEST
P.O. Box 57, 3360 AB Sliedrecht
(The Netherlands)
Industrieweg 6, 3361 HJ Sliedrecht
Tel. +31(0)184-413300 www.vanbeest.nl

Format A4
Scale 1:3

Title Green Pin BigMouth® Shackles, bow shackles with safety bolt

Remark
G-4263
ASGHMB25

Drawing number 6851
Rev. 0